REV	LOCATIONS	DESCRIPTION	DATE	REVISER	APPD
1	1	Size changes	25/APR/21	KATE	JOHNNY
2	2	Size changes	01/JUN/21	KATE	CHERRY
3	3	Update tolerance	07/AUG/26	MATT	LEO

Electrical
Temperature Range—Operating: −25°C~+85°C
Material
Housing: PA66 (UL 94V−0)
Applicable Terminal: FT20007

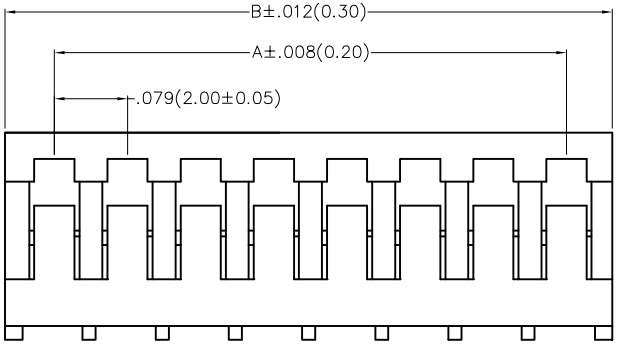

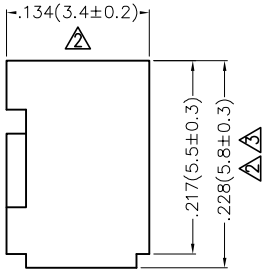

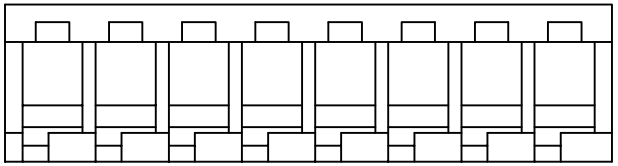

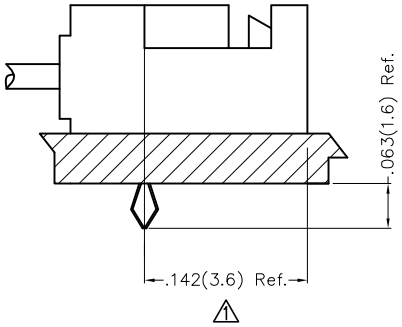

Ordering Information

FHG	200	08	—	S	XX	M	2	W1	B
1	2	3		4	5	6	7	8	9

1	Category: FHG—Housing	2	Series Number: 200—Pitch2.00mm	3	Distinction No.: 08	4	Row Option: S—Single Row		
5	Circuits: XX	6	Type: M—Male	7	Material—Resin: 2—PA66	8	Color—Resin: W1—White	9	Packaging: B—PE Bag

Circuits (n)	Part No.	Dimensions(in/mm) A	Dimensions(in/mm) B	Circuits (n)	Part No.	Dimensions(in/mm) A	Dimensions(in/mm) B
2	FHG20008—S02M2W1B	.079(2.00)	.177(4.50)	10	FHG20008—S10M2W1B	.709(18.00)	.807(20.50)
3	FHG20008—S03M2W1B	.157(4.00)	.256(6.50)	11	FHG20008—S11M2W1B	.787(20.00)	.886(22.50)
4	FHG20008—S04M2W1B	.236(6.00)	.335(8.50)	12	FHG20008—S12M2W1B	.866(22.00)	.964(24.50)
5	FHG20008—S05M2W1B	.315(8.00)	.413(10.50)	13	FHG20008—S13M2W1B	.945(24.00)	1.043(26.50)
6	FHG20008—S06M2W1B	.394(10.00)	.492(12.50)	14	FHG20008—S14M2W1B	1.024(26.00)	1.122(28.50)
7	FHG20008—S07M2W1B	.472(12.00)	.571(14.50)	15	FHG20008—S15M2W1B	1.102(28.00)	1.201(30.50)
8	FHG20008—S08M2W1B	.551(14.00)	.650(16.50)	16	FHG20008—S16M2W1B	1.181(30.00)	1.280(32.50)
9	FHG20008—S09M2W1B	.630(16.00)	.728(18.50)				

THIRD ANGLE PROJECTION	GENERAL TOLERANCES (UNLESS SPECIFIED)		APPROVE BY: FRANK	DATE: 18/JUN/13	PART NO.: FHG20008—SXXM2W1B
	X.±.012(0.30)	X.°±5°	CHECKED BY: CHERRY	DATE: 18/JUN/13	ITEM NO.: FHG20008
DESIGN UNITS: Inch (metric)	X.X±.008(0.20)	.X°±2°			TITLE: Wire to Board Pitch 2.0mm(Housing)
SCALE: 5:1	X.XX±.006(0.15)	.XX°±1°	DRAWN BY: KATE	DATE: 18/JUN/13	
SIZE: A4	X.XXX±.004(0.10)	.XXX°±0.5°			

TXGA Building Technology Cornerstone

REV 3 | SHEET NO. 1/1

THIS DRAWING CONTAINS INFORMATION THAT IS PROPRIETARY TO TXGA INDUSTRIAL ELECTRONICS(S.Z)CO.,LTD AND SHOULD NOT BE USED WITHOUT WRITTEN PERMISSION